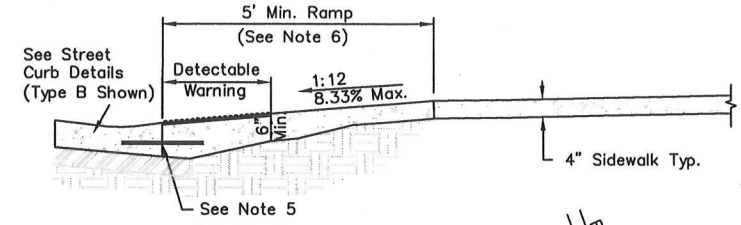

SECTION A-A

Legend:

Detectable Warning Surface

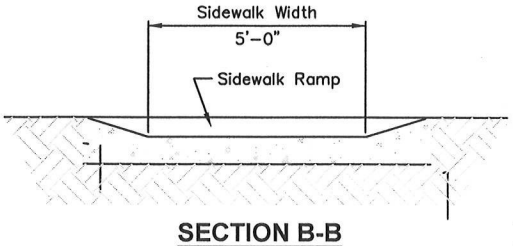

SECTION B-B

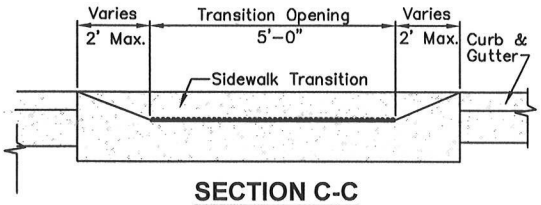

SECTION C-C

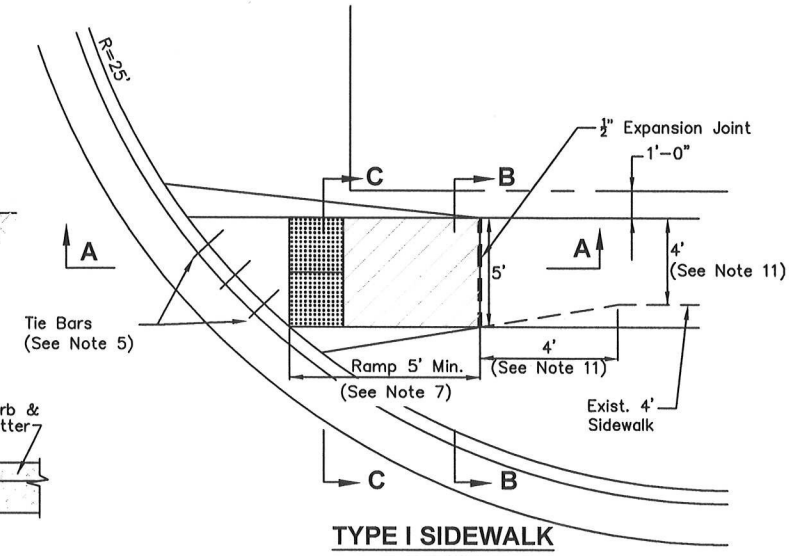

TYPE I SIDEWALK RAMP

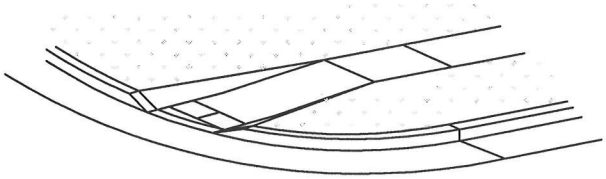

3-D VIEW TYPE I SIDEWALK RAMP

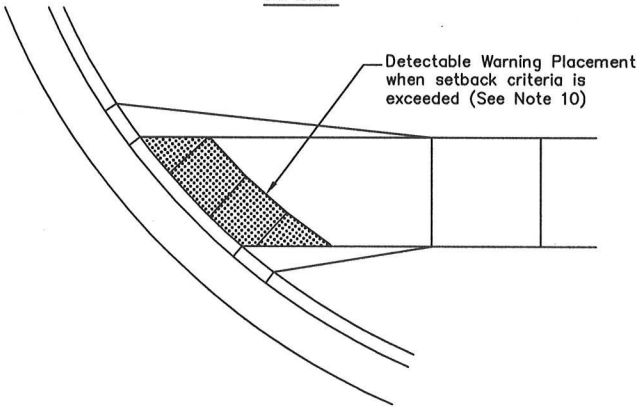

SIDEWALK & SIDEWALK RAMP NOTES:

1. Curb depression location determined from the intersection of the extension of back of sidewalk and back of curb & gutter.
2. Concrete shall be KCMMB 4K
3. Longitudinal joint spacing to match width of sidewalk.
4. Expansion joints shall be placed between ramp and sidewalk and where sidewalk abuts driveways and similar structures, and 200' centers max.
5. Install 18" tie bars #4 epoxy coated @ 18" o.c.
6. Sidewalk Ramp shall be lengthened to provide ADA compliance slope but need not exceed 15'.
7. ADA maximum ramp slope = 1"/Ft. (1:12)
   ADA maximum cross slope = 2.0% (1:50)
8. The curb transitions shall be 2' in length.
9. The flares shall extend 7' beyond the transition area. The width of the flares will vary depending on the slope of the ramp.
10. If distance exceeds 5' from back of curb to leading edge of Detectable Warning, Detectable Warning panels shall be placed at the back of curb as shown.
11. Minimum width at back of ramp is 5'. Transition length is a minimum of 4' if width of existing sidewalk is 4'.

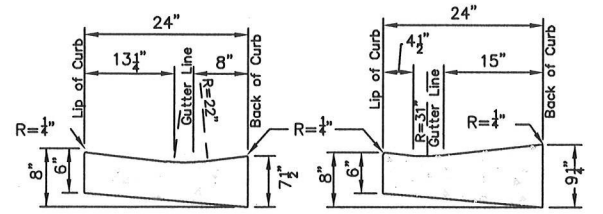

STREET CURB DETAILS AT RAMP

APPROVED:			TYPE I SIDEWALK RAMP	STANDARD DETAIL 21-10
REVISED:				

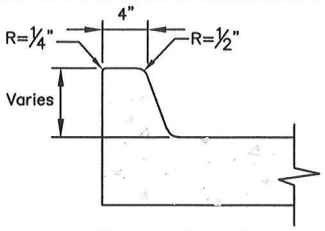

Ramp Curb Detail

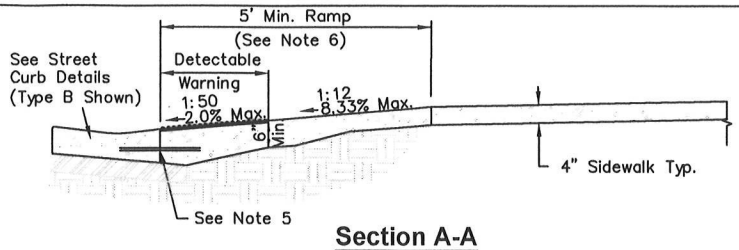

Section A-A

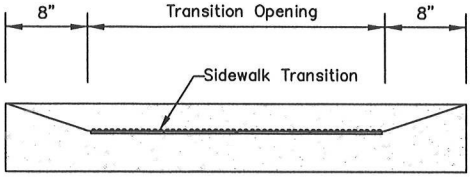

Section B-B

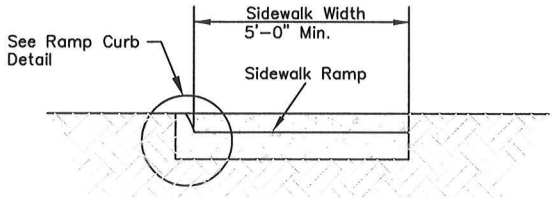

Section C-C

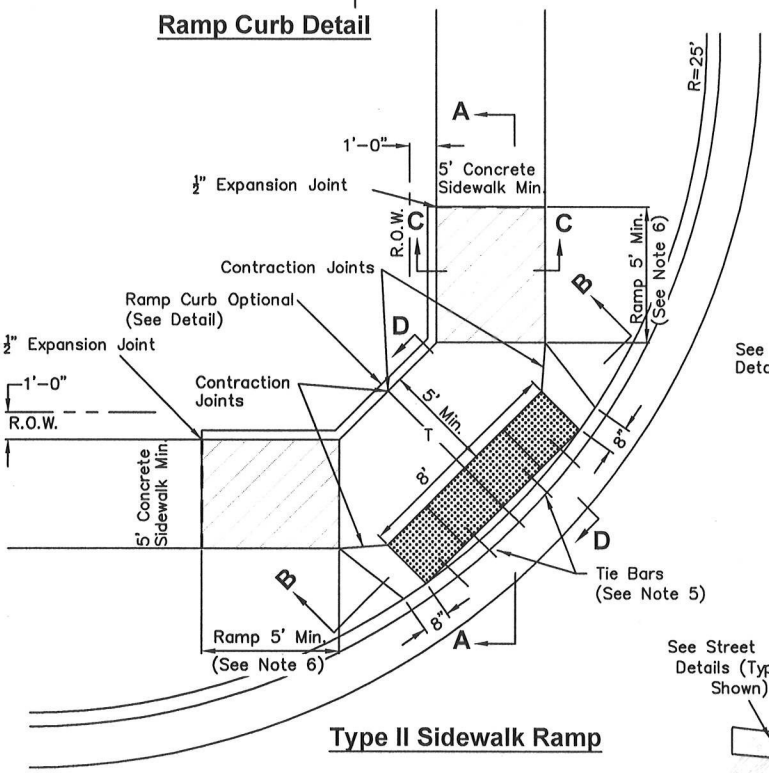

Type II Sidewalk Ramp

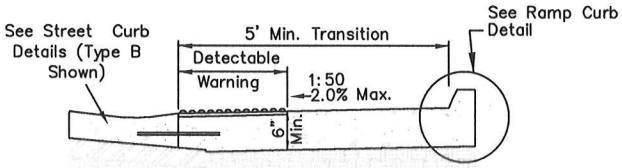

Section D-D

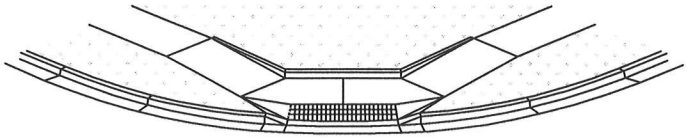

3-D View Type II

Sidewalk Ramp

Sidewalk & Sidewalk Ramp Notes:

1. Curb depression location determined from the intersection of the extension of back of sidewalk and back of curb & gutter.
2. Concrete shall be KCMMB 4K.
3. Longitudinal joint spacing to match width of sidewalk.
4. Expansion joints shall be placed between ramp and sidewalk and where sidewalk abuts driveways and similar structures, and 200' centers max.
5. Transition area behind detectable warning panels shall match adjacent sidewalk width or 4' minimum. Install 18" tie bars #4 epoxy coated @ 18" o.c.
6. Sidewalk Ramp shall be lengthened to provide ADA compliance slope but need not exceed 15'.
7. ADA maximum ramp slope = 1"/Ft. (1:12)
   ADA maximum cross slope = 2.0% (1:50)
8. The curb transitions shall be 2' in length.

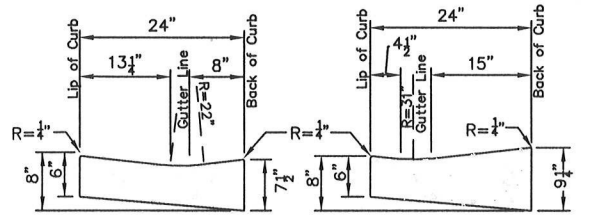

Gutter is 1 1/2" Below Lip of Curb — Use With Type B Curb

Gutter is 1/2" Below Lip of Curb — Use With Type A Curb

Street Curb Details at Ramp

APPROVED:			TYPE II SIDEWALK RAMP	STANDARD DETAIL 21-10A
REVISED:				

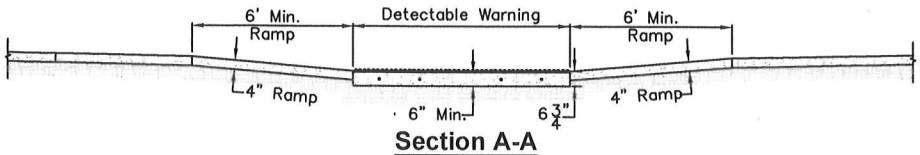

Section A-A

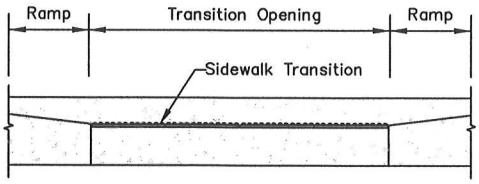

Section B-B

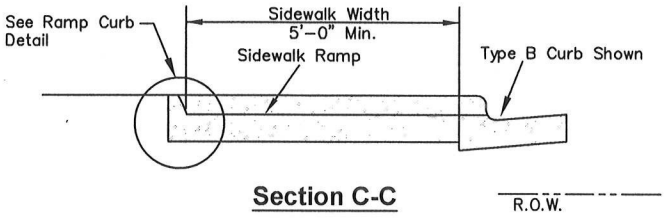

Section C-C

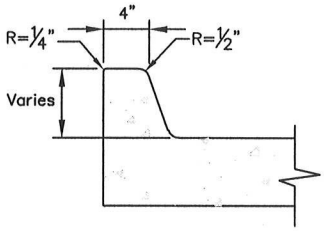

Ramp Curb Detail

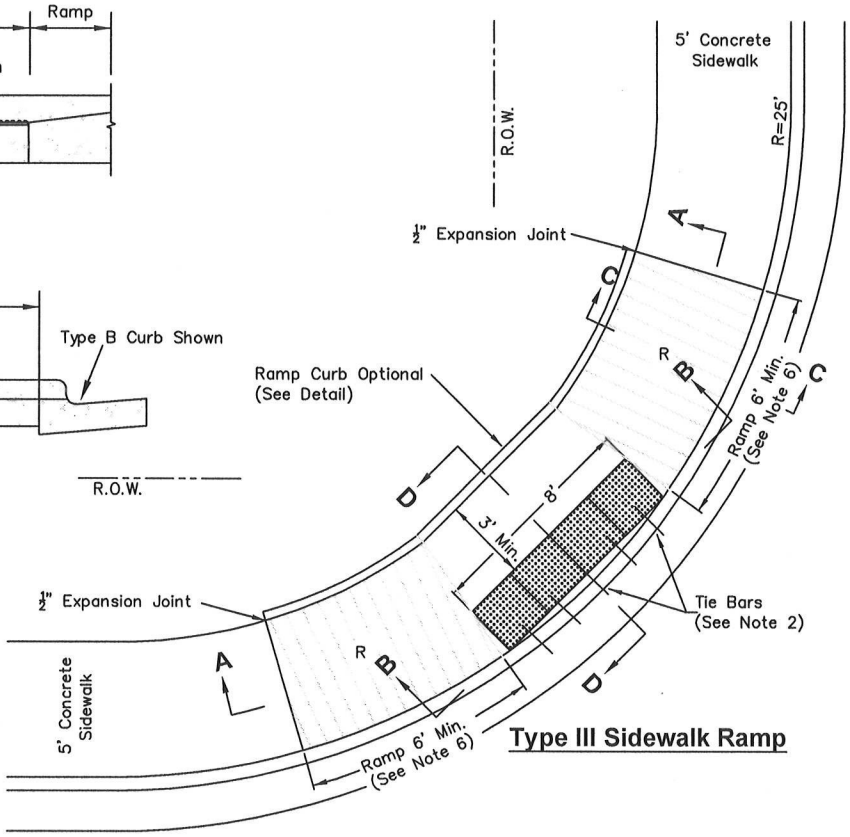

Type III Sidewalk Ramp

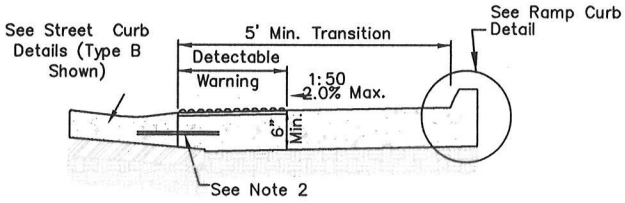

Section D-D

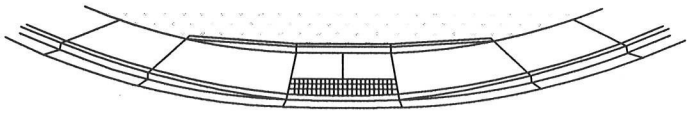

3-D View Type III

Sidewalk Ramp

Sidewalk & Sidewalk Ramp Notes:

1. Concrete shall be KCMMB 4K.
2. Transition area behind detectable warning pavers shall match adjacent sidewalk width or 3' minimum. Install 18" tie bars #4 epoxy coated @ 18" O.C.
3. Sidewalk Ramp shall be lengthened to provide ADA compliance slope but need not exceed 15'.
4. Expansion joints shall be placed between ramp and sidewalk and where sidewalk abuts driveways and similar structures, and 200' centers max.
5. The curb transitions shall extend the entire length of ramp section.
6. ADA Maximum Ramp Slope = 8.3% (1:12)
   ADA Maximum Cross Slope = 2.0% (1:50)

APPROVED:			TYPE III SIDEWALK RAMP	STANDARD DETAIL 21-10B
REVISED:				

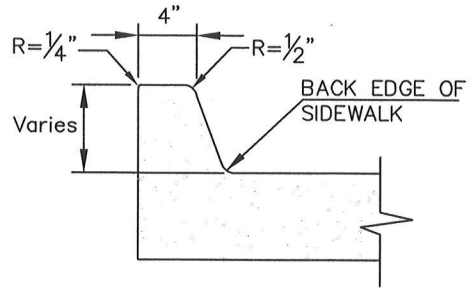

Ramp Curb Detail

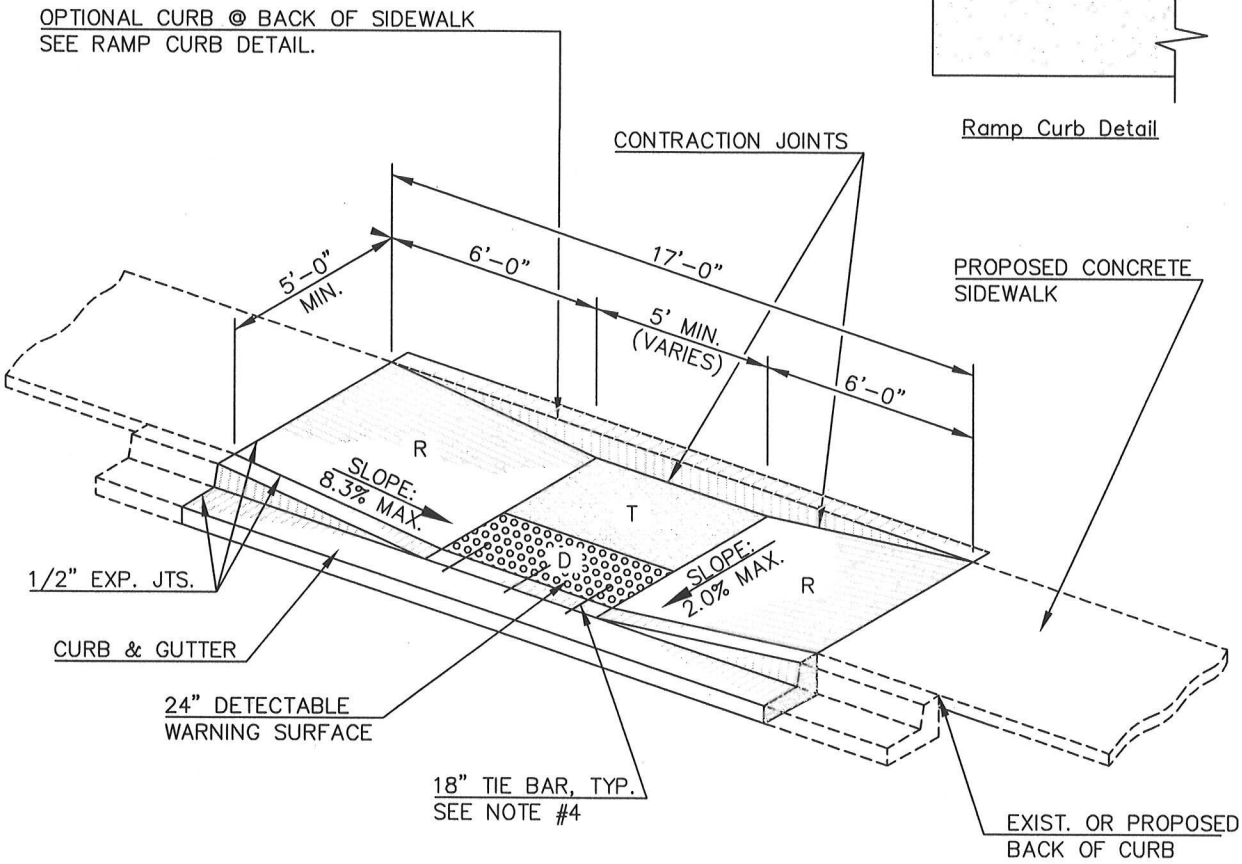

Type IV Sidewalk Ramp

NOTES:

1. ADA MAXIMUM CROSS-SLOPE = 2.0% (1:50)
2. ADA MAXIMUM RAMP SLOPE = 8.3% (1:12)
3. EXPANSION JOINTS SHALL BE PLACED BETWEEN THE RAMP AND SIDEWALK.
4. INSTALL 18" TIE BARS (#4 EPOXY COATED) @ 18" O.C.
5. CONCRETE SHALL BE KCMMB 4K.

LEGEND:

R	RAMP
D	DETECTABLE WARNING SURFACE
T	TRANSITION

APPROVED:			TYPE IV SIDEWALK RAMP	STANDARD DETAIL 21-10C
REVISED:				

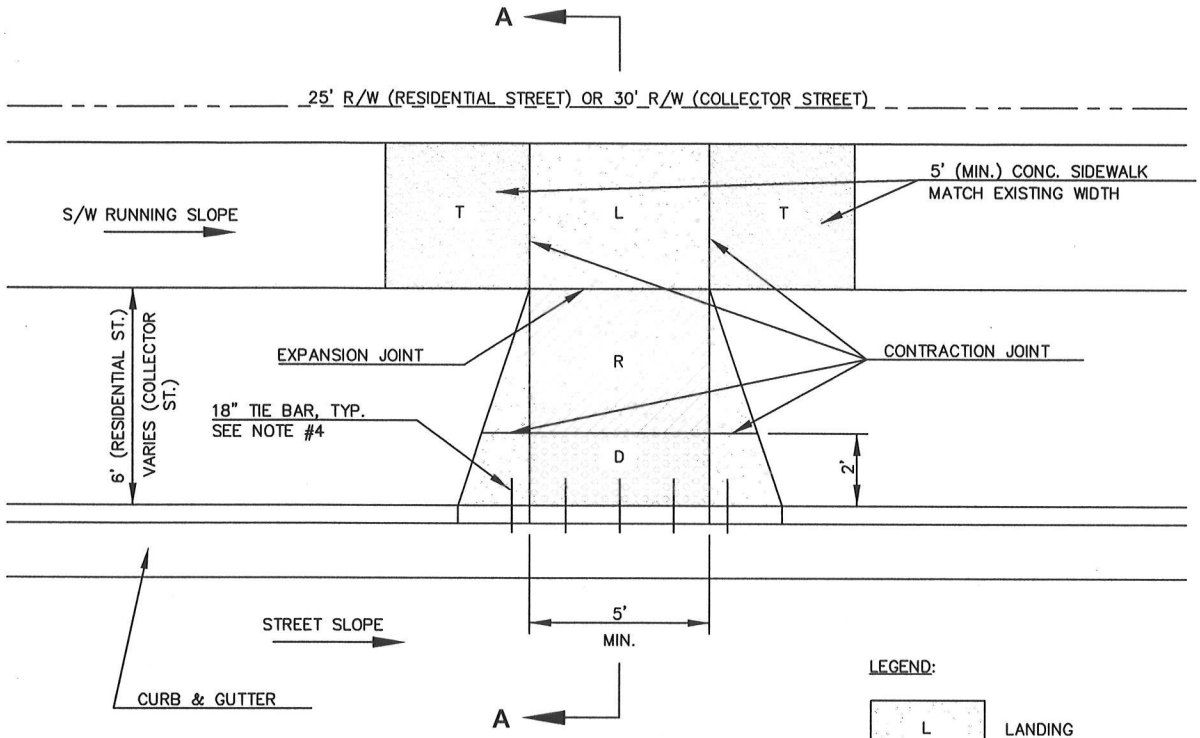

MID-BLOCK RAMP DETAIL

LEGEND:

L	LANDING
R	RAMP
D	DETECTABLE WARNING SURFACE
T	TRANSITION

NOTES:

1. RAMP CROSS SLOPE SHALL TRANSITION FROM STREET SLOPE TO 2% OR LESS AT LANDING
2. LANDING ELEVATION SHALL BE SET TO LIMIT MAXIMUM RAMP SLOPE @ 8.3% (1:12).
3. IF SIDEWALK RUNNING SLOPE IS 3% OR LESS, USE 1 SQUARE OF SIDEWALK ON EITHER SIDE OF THE LANDING TO TRANSITION FROM RUNNING SLOPE TO LANDING SLOPE.
4. INSTALL 18" TIE BARS (#4 EPOXY COATED) @ 18" O.C.
5. CONCRETE SHALL BE KCMMB 4K.
6. ADA MAXIMUM RAMP SLOPE IS 8.3% (1:12). ADA MAXIMUM CROSS SLOPE IS 2.0% (1:50).

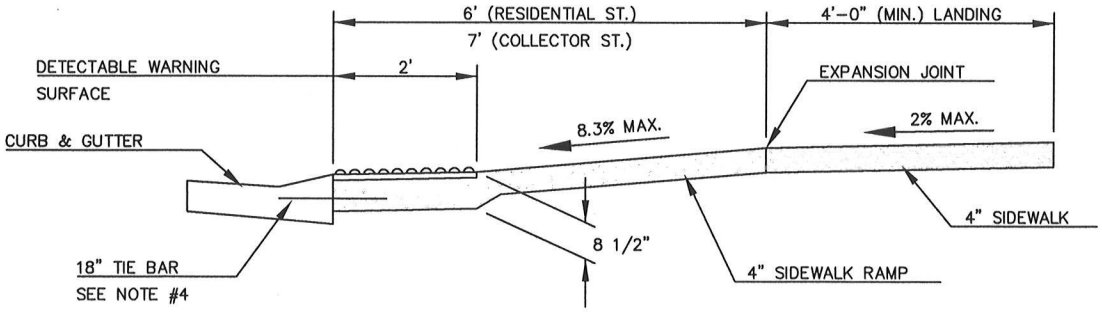

SECTION A-A

APPROVED:		BASEHOR KANSAS and still growing 1889	MID-BLOCK SIDEWALK RAMP	STANDARD DETAIL 21-10D
REVISED:				

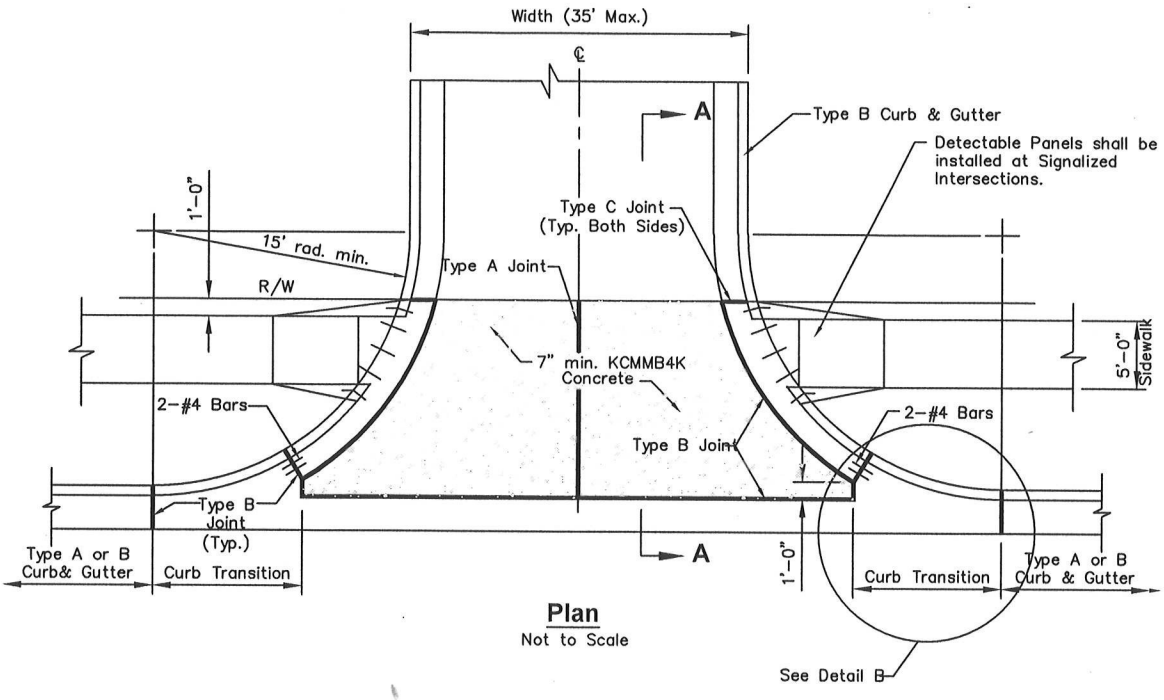

Plan
Not to Scale

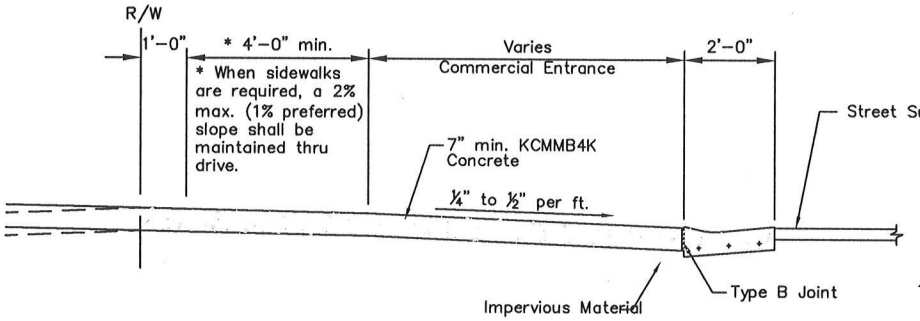

Section A-A
Not to Scale

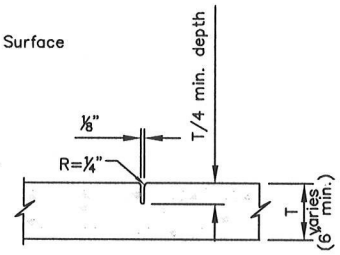

Type A (Contraction)

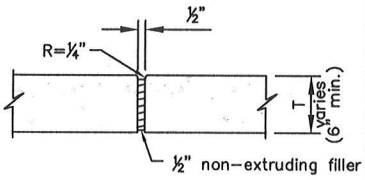

Type B (Isolation)

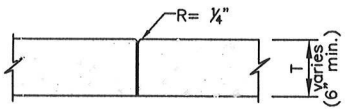

Type C (Construction)

JOINT DETAILS
Not to Scale

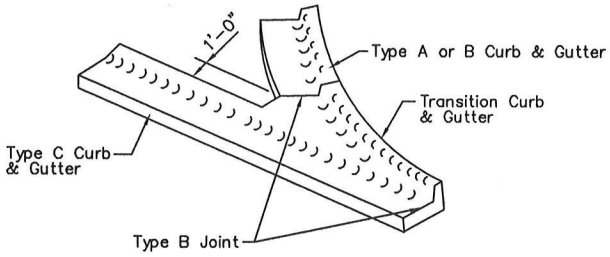

Detail B
Not To Scale

* KCMMB4K CONCRETE SHALL BE USED THROUGHOUT AND ADHERE TO CITY OF OLATHE TECHNICAL SPECIFICATIONS SECTION 2000 AND SECTION 2100.

APPROVED:	Jan. 1, 2017		COMMERCIAL & INDUSTRIAL ENTRANCE DRIVE	STANDARD DETAIL 21-11
REVISED:	Feb. 1, 2018			

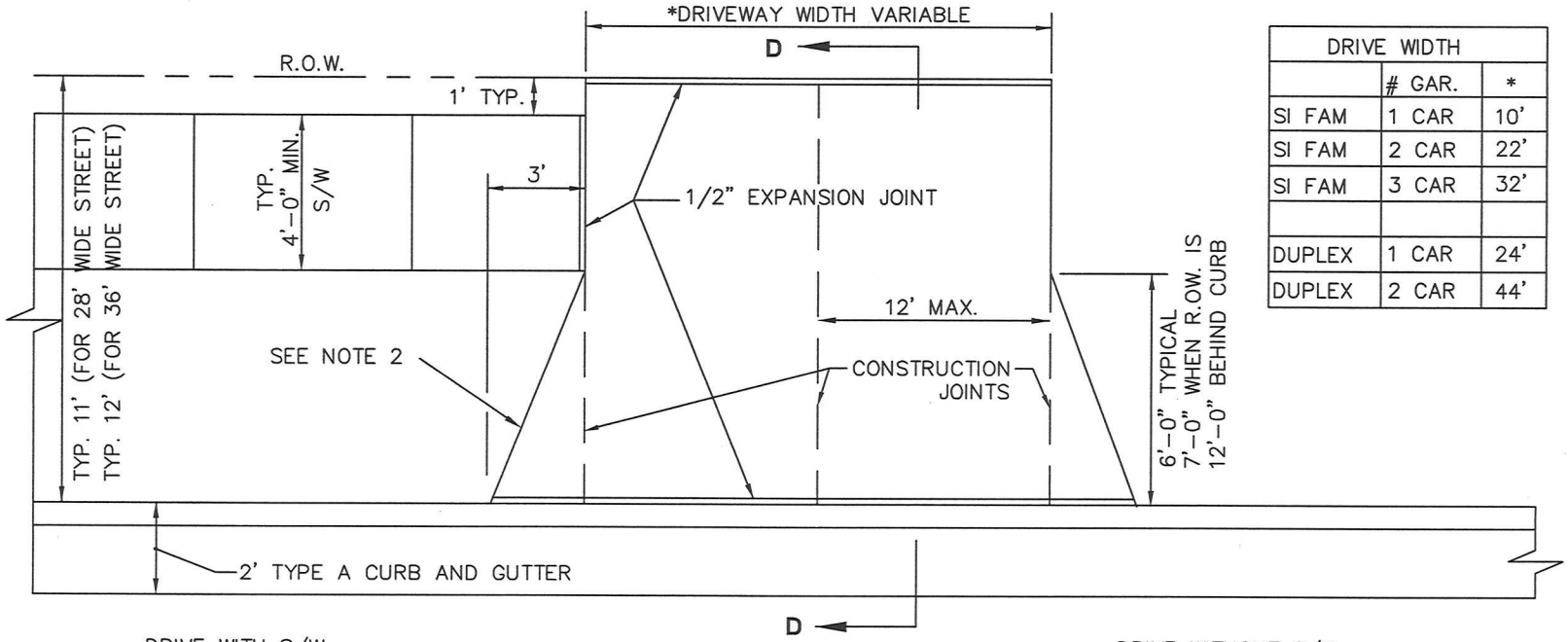

DRIVE WIDTH		
	# GAR.	*
SI FAM	1 CAR	10'
SI FAM	2 CAR	22'
SI FAM	3 CAR	32'
DUPLEX	1 CAR	24'
DUPLEX	2 CAR	44'

DRIVE WITH S/W

PLAN

DRIVE WITHOUT S/W

NOTES:

1. KCMMB4K CONCRETE WITH 6.5% AIR ENTRAINMENT REQUIRED PER CITY OF BASEHOR TECHNIAL SPECIFICATIONS SECTION 2000 AND SECTION 2100. DRIVE APPROACHES WITH NO CONNECTING SIDEWALK WILL SLOPE 1% TO 2% FROM THE R.O.W. TO THE POINT WERE WINGS CONNECT.
2. THE DRIVE APPROACH WILL HAVE A 5 FOOT WING ON EACH SIDE FOR DRIVEWAYS 10 FOOT OR LESS IN WIDTH.

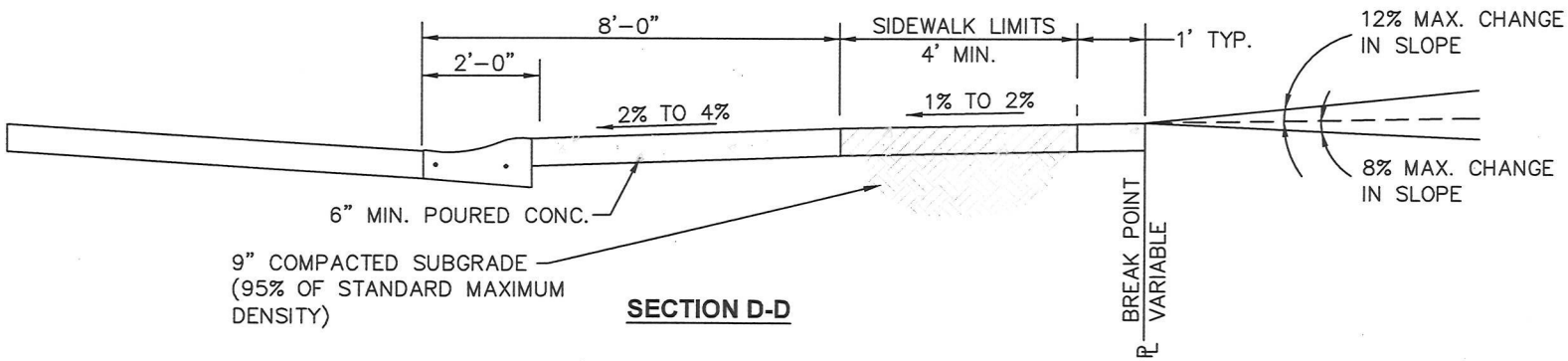

SECTION D-D

APPROVED: Jan. 1, 2017
REVISED: Feb. 1, 2018

RESIDENTIAL DRIVE (TYPE A CURB)

STANDARD DETAIL 21-12

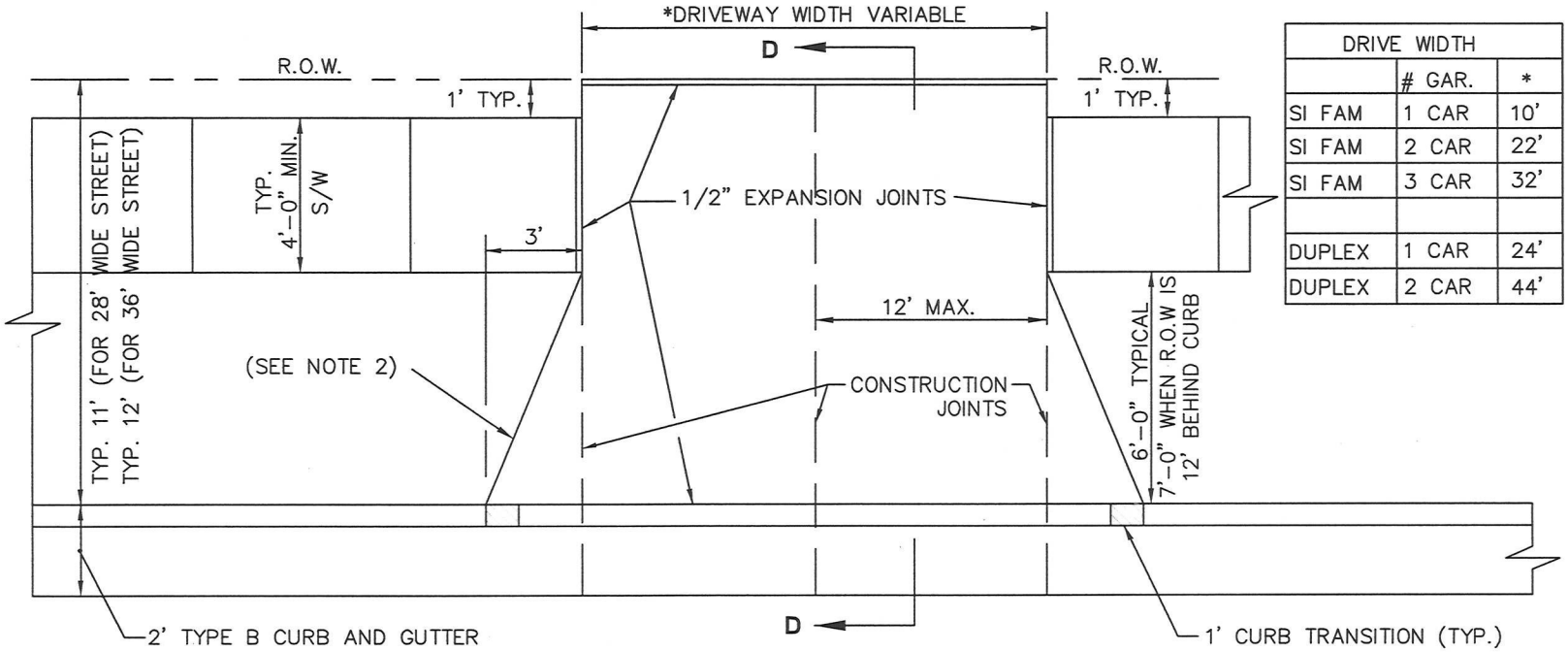

DRIVE WIDTH		
	# GAR.	*
SI FAM	1 CAR	10'
SI FAM	2 CAR	22'
SI FAM	3 CAR	32'
DUPLEX	1 CAR	24'
DUPLEX	2 CAR	44'

PLAN

NOTES:

1. KCMMB4K CONCRETE WITH 6.5% AIR ENTRAINMENT REQUIRED PER CITY OF BASEHOR TECHNIAL SPECIFICATIONS SECTION 2000 AND SECTION 2100. DRIVE APPROACHES WTIHOUT ADJACENT SIDEWALKS SHALL SPLOE 2% TO 4% FROM THE R.O.W. TO THE BACK OF THE CURB.
2. THE DRIVE APPROACH WILL HAVE A 5 FOOT WING ON EACH SIDE FOR DRIVEWAYS 10 FOOT OR LESS IN WIDTH.
3. DRIVEWAYS ALONG ARTERIAL ROADWAYS WILL HAVE A MINIMUM WIDTH OF 16' AT THE RIGHT OF WAY. WINGS WILL BE 5' IN WIDTH.

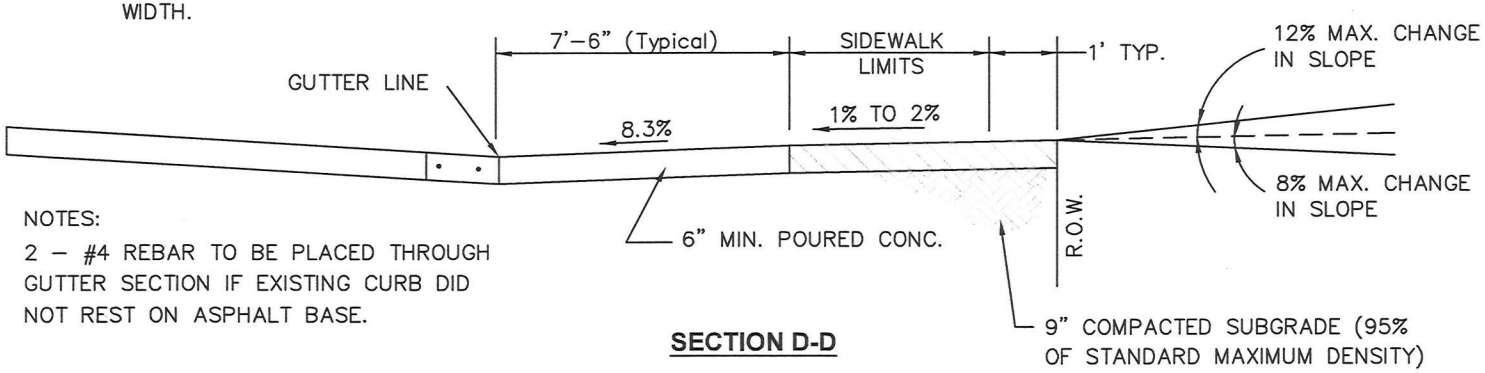

NOTES:
2 – #4 REBAR TO BE PLACED THROUGH GUTTER SECTION IF EXISTING CURB DID NOT REST ON ASPHALT BASE.

SECTION D-D

APPROVED:	Jan. 1, 2017
REVISED:	Feb. 1, 2018

RESIDENTIAL DRIVE (TYPE B CURB)

STANDARD DETAIL 21-13

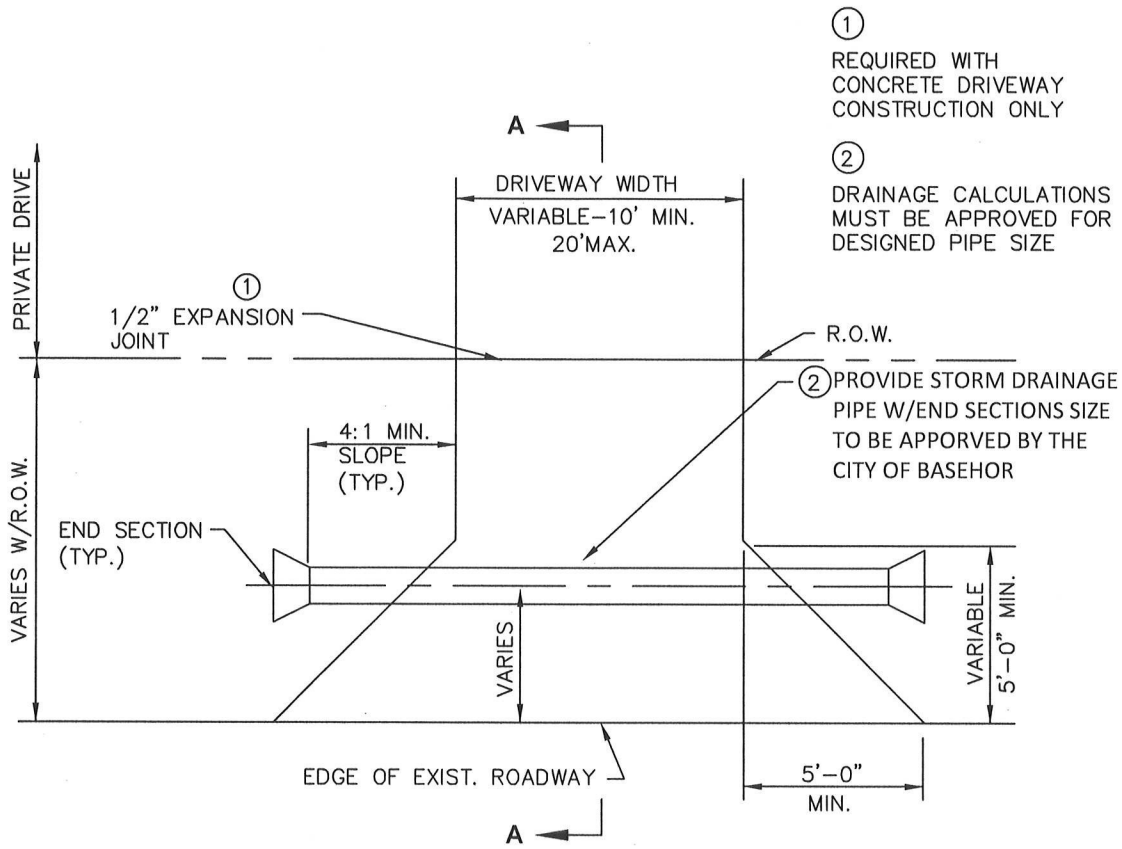

PLAN

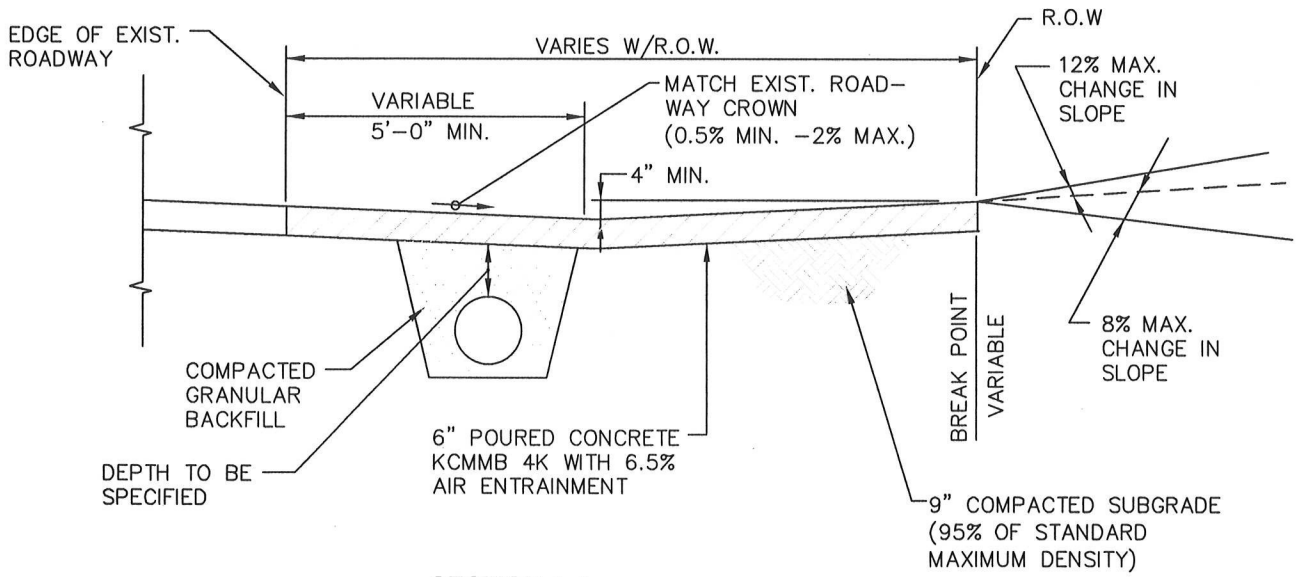

SECTION A-A

APPROVED:	Jan. 1, 2017		RESIDENTIAL DRIVE AT NON-CURBED STREET	STANDARD DETAIL 21-14
REVISED:	Feb. 1, 2018			

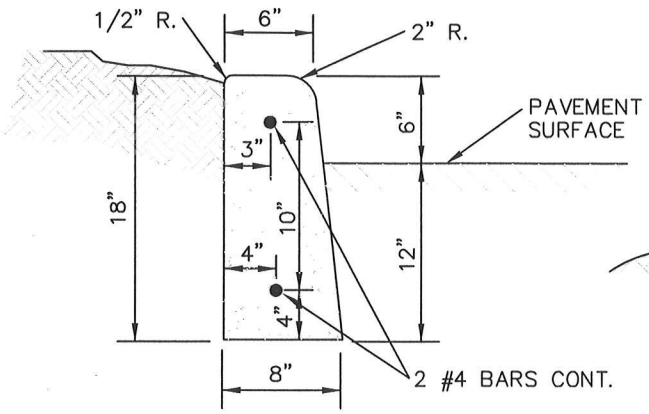

TYPE "C"

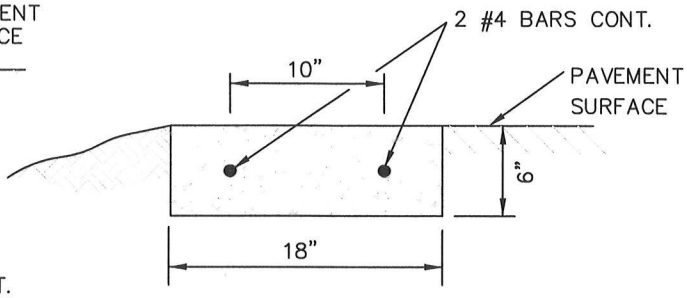

TYPE "R" RIBBON CURB

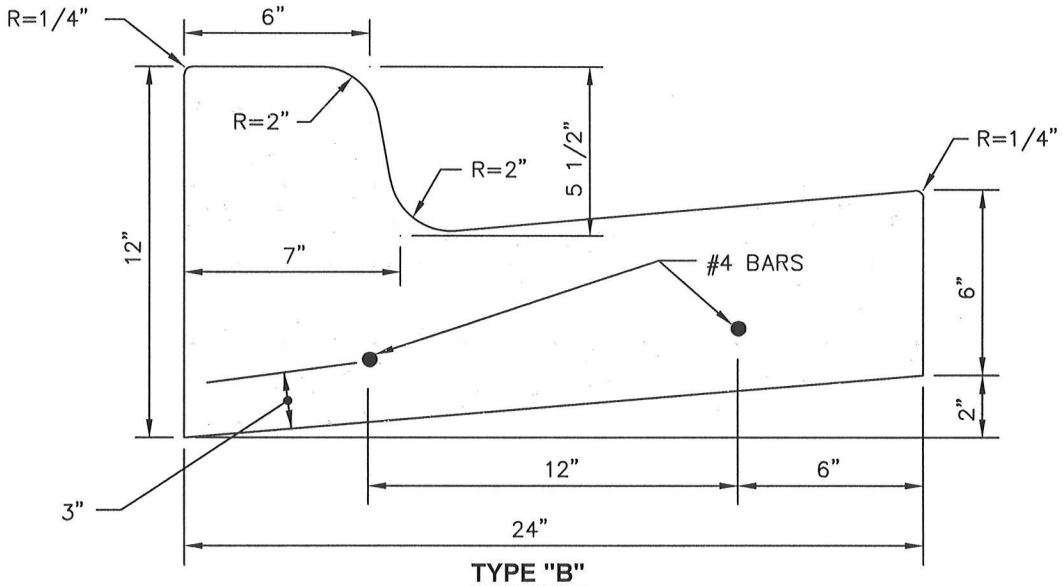

TYPE "B"

NOTE:

1. EXPANSION, CONTRACTION, OR CONSTRUCTION JOINTS ARE TO BE SAME AS NOTED ON TYPE "A" CURB AND GUTTER DETAIL.
2. ALL CURBS MUST BE CAST IN PLACE.
3. KCMMB4K CONCRETE SHALL BE USED THROUGHOUT AND ADHERE TO THE CITY OF BASEHOR TECHNICAL SPECIFICATIONS SECTION 2000 AND 2100

APPROVED:		BASEHOR KANSAS and still growing 1889	PARKING LOT CONCRETE CURB	STANDARD DETAIL 21-15
REVISED:				